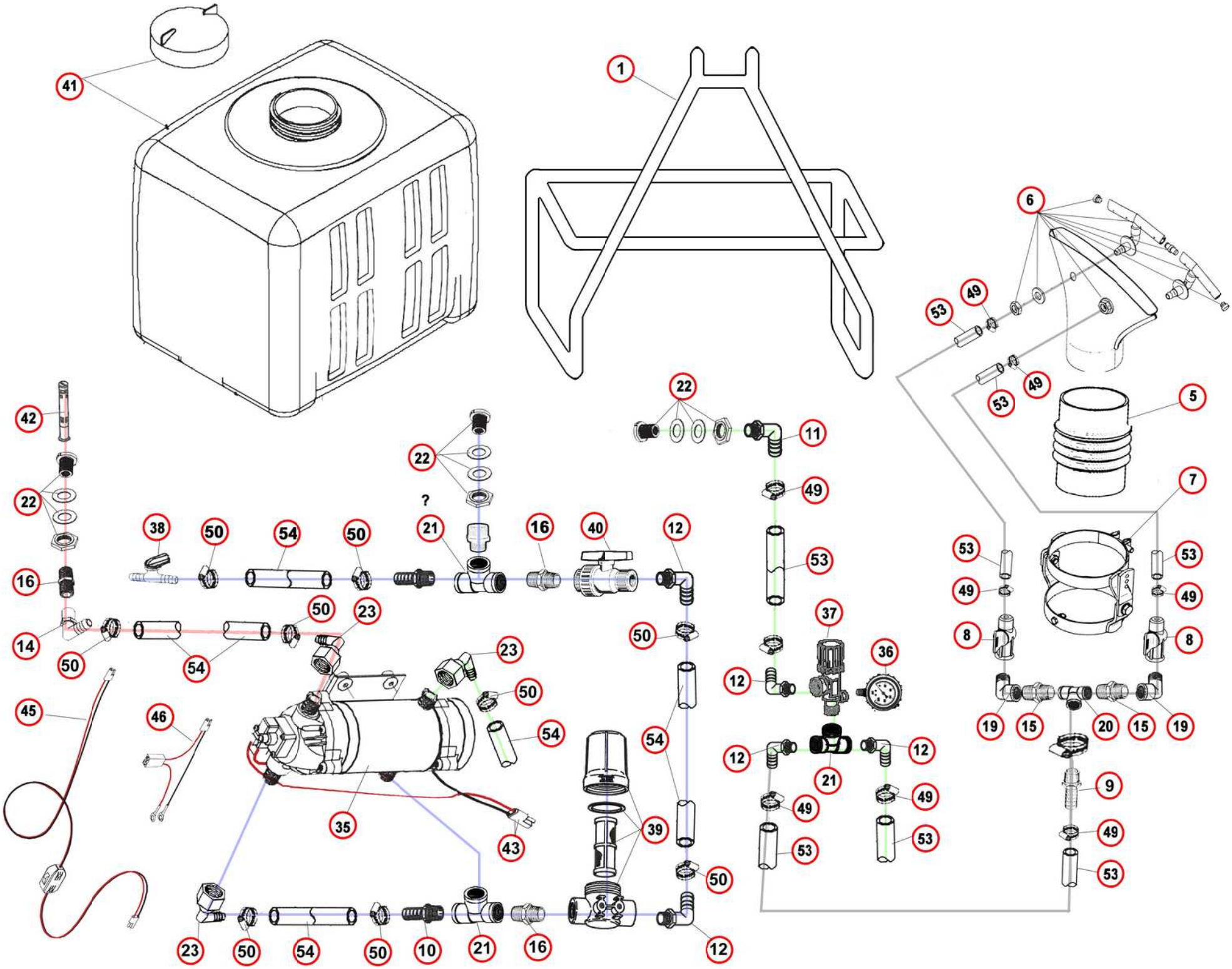
41
1
6
53
49
53
49
5
42
22
22
11
49
7
22
?
38
50
54
50
21
16
40
12
53
53
53
16
49
49
50
23
37
14
50
54
50
8
8
36
23
12
50
45
46
54
54
19
15
20
15
19
12
12
21
9
49
49
35
43
39
53
53
49
53
50
23
50
54
50
10
21
16
12

Item	Position	Description	Qty
P30-exhaust tube	3	Tube 3" exhaust pipe 3" long..	1.00
P30-BL3A/1	4	CF-Engine/Blower assy...	1.00
P30-02.020.000	5	CI-Bellows..	1.00
P30-02.195.200C	6	CI-Fishtail Assy for P30	1.00
P30-02.046.000	7	CI-Swivel clamp, Ø85 [&P30]	1.00
P30-20.202.200	8	CI-Valve, shut-off..	2.00
P30-3A1438	9	PB-Fitting, ¼" M.P. × 3/8" barb..	2.00
P30-3A1212	10	PB-Fitting, ½" M.P. × ½" barb..	1.00
P30-3EL1238	11	PB-Fitting, 'L', ½" M.P. × 3/8" barb..	1.00
P30-3EL12	12	PB-Fitting, 'L', ½" M.P. × ½" barb..	5.00
P30-3EL3412	13	PB-Fitting, 'L' ¾" M.P. × ½" barb..	1.00
P30-3EL3412F	14	PB-Fitting, ¾" F.P. × ½" barb..	1.00
P30-3M14	15	PB-Fitting, ¼" NPT all thread nipple..	2.00
P30-3M12	16	PB-Fitting, ½" M × ½" M..	2.00
P30-8M3412	17	PB-Reducer nipple, ¾×½"..	1.00
P30-3RB3414	18	PB-Reducer bushing, ¾M×¼FM..	1.00
P30-3SE14	19	PB-Fitting, 'L', ¼" M.P. × ¼" F.P...	2.00
P30-3TT14	20	PB-Fitting, 'Tee' ¼" NPT..	1.00
P30-62209	21	PB-Tee, poly ½" schedule 80..	3.00
P30-60401	22	PB-Fitting, bulkhead ¾" double tap..	3.00
P30-803401	23	PB-Fitting, 'L' ½" F.P.T. × ½" barb adapter, pump..	3.00
P30-38027	24	PB-Cap, nozzle body..	1.00
P30-2266914PPB	25	PB-Fitting, 90°nozzle body, ¼NPT..	1.00
P30-QJ4676-90-¼NYB	26	PB-Adapter, QJ ¼" 90° Female NPT..	1.00
P30-CP19438EPR	27	PB-Gasket, split..	2.00
P30-6471A400TBD	28	PB-Nozzle body, 'L', 3/8" barb brass..	1.00
P30-QJ8360NYB	29	PB-Nozzle, anti-drip, 10 PSI..	1.00
P30-DVP4	30	PB-Orifice, #4 yellow..	1.00
P30-DVP5	31	PB-Orifice, #5 blue..	1.00
P30-DVP6	32	PB-Orifice, #6 red..	1.00
P30-DVP7	33	PB-Orifice, #7 brown..	1.00
P30-DVP8	34	PB-Orifice, #8 gray..	2.00
P30-4211-035	35	PB-Pump, ShurFlo 12V, 7GPM..	1.00
P30-GG60	36	PB-Gauge, pressure, 60PSI..	1.00
P30-2312012PP	37	PB-Pressure relief valve, ½"..	1.00
P30-9408	38	PB-BallValve, ½" barb (drain)..	1.00
P30-AA12212PP16	39	PB-Strainer assy., ½"×16mesh inox..	1.00
P30-050SUBV	40	PB-Valve, ball, ½" (Arag)..	1.00
P30-47026	41	PB-Tank, 30 gal...	1.00
P30-33710019	42	PB-Jet agitator....	1.00
P30-47965	43	PB-Connector pair, flat 12V..	0.50
P30-DC784	44	PB-Flex Gard Wire Cover 3/8" ..	1.00
P30-SPT-SWH-9615...	45	PB-'Wiring harness w/switch	1.00
P30-SPT-BCG-1215A...	46	PB- fuse Conector..	1.00
P30-01412	47	PB-3PT pin, Top Link, ¾" × 3½"..	1.00
P30-002000 (80235)	48	PB-3PT pins, lower Cat I 7/8×5½..	2.00
P30-62602	49	PB-Clamp, ¼ × 5/8", N..	9.00
P30-62606	50	PB-Clamp, 5/16 × 7/8", N..	10.00
P30-HC067 "F"	51	PB-Snap grip Clamp .67"-.59" size F	2.00
P30-HC075 "G"	52	PB-Snap grip Clamp .75-.67 size G..	2.00
P30-8006	53	PB-Tubing, 3/8" Jiffy hose (per foot unit)..	5.50
P30-8008	54	PB-Tubing, 1/2" Jiffy hose (per foot unit)..	5.30